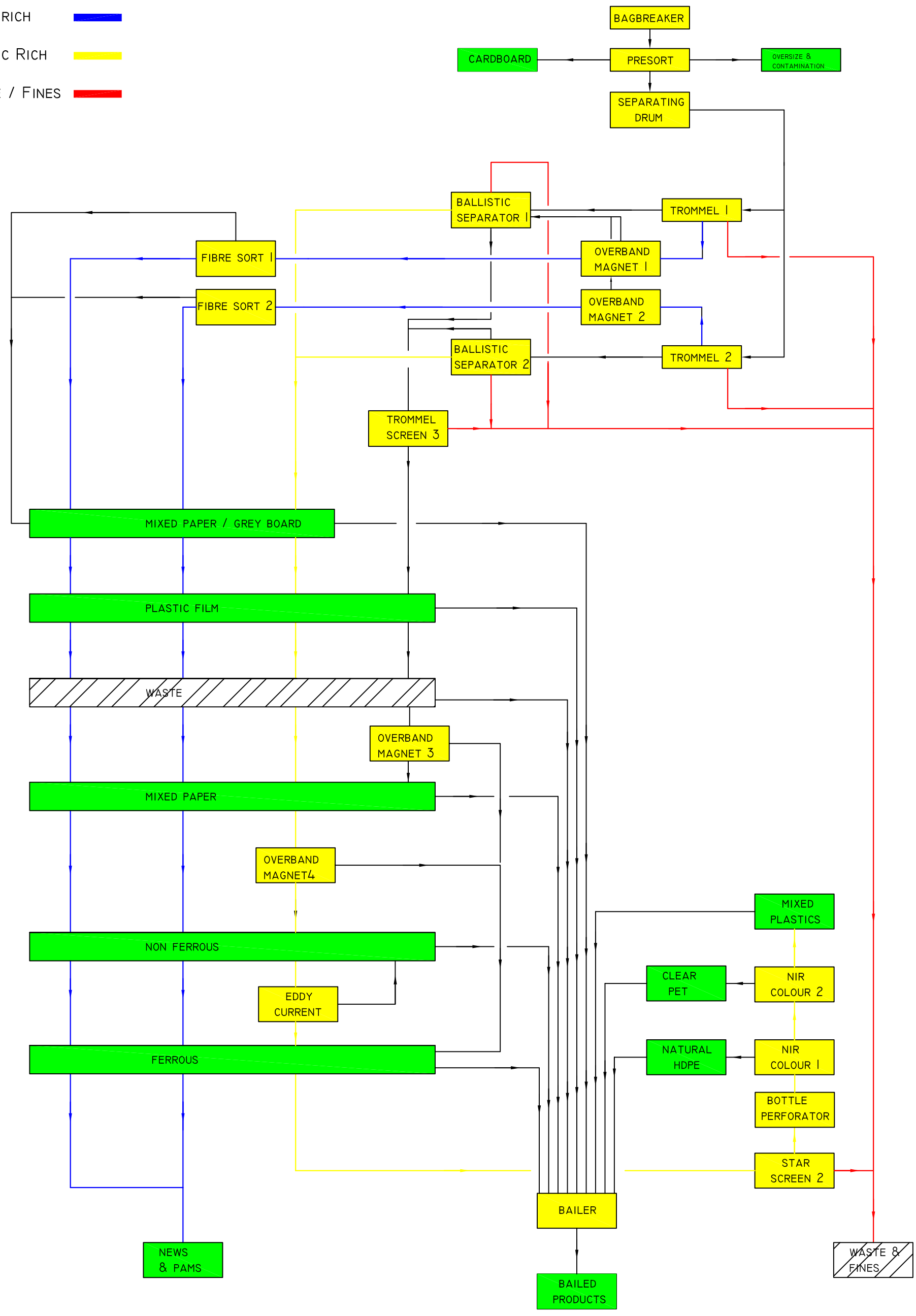VIRIDOR WASTE MANAGEMENT
MASONS MRF PROCESS FLOW DIAGRAMM
GA2_REV D APRIL 2005